Virtual tours to the KATRIN experiment

Manuel Klein,[a,*] Christian Humm,[b] Leonard Köllenberger,[a] Philipp Niemann,[b,c] Yannic Scheuermann,[c] Philipp Schrögel[b] and Kathrin Valerius[a]
[a]Karlsruhe Institute of Technology (KIT), Institute for Astroparticle Physics (IAP), [b]KIT, Department for Science Communication,
[c]National Institute for Science Communication (NaWik)

The KArlsruhe TRItium Neutrino (KATRIN) experiment

Science goal: kinematic measurement of the absolute neutrino mass scale
Approach: precision measurement near the endpoint of the tritium beta spectrum
MAC-E principle: magnetic collimation of electron momenta with electrostatic filter
International collaboration: ca. 200 scientists, engineers and technicians

2004: design report[1,2]
2018: start of tritium operation
2019: world-leading neutrino mass limit[3]
2021: first sub-eV neutrino mass limit[4]

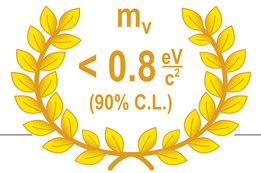

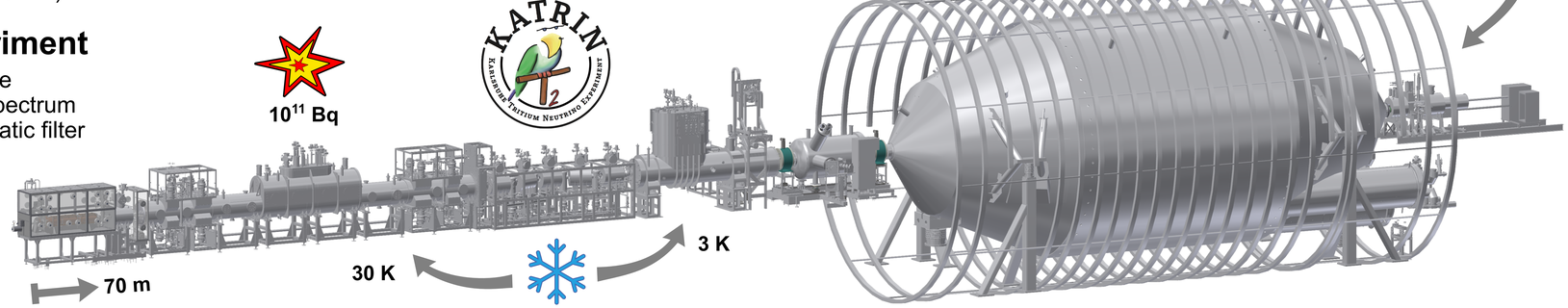

Motivation for virtual tours

Restricted access to the beamline due to radiation protection, high voltage, magnetic fields, closed vacuum setup, and lately the pandemic.
Visualisation of the complete beamline, dynamic particle processes inside, and the challenging construction over almost two decades.
Interactive exploration of the laboratory, experimentation with measurement conditions, and (dis)assembling of large-scale components.

References

1) J. Angrik et al., KATRIN Design Report 2004, Wissenschaftliche Berichte FZKA 7090, http://bibliothek.fzk.de/zb/berichte/FZKA7090.pdf
2) M. Aker et al., "The Design, Construction, and Commissioning of the KATRIN Experiment", arXiv preprint arXiv:2103.04755 (2021).
3) M. Aker et al., "Improved upper limit on the neutrino mass from a direct kinematic method by KATRIN", Physical review letters 123.22 (2019): 221802.
4) M. Aker et al., "First direct neutrino-mass measurement with sub-eV sensitivity", arXiv preprint arXiv:2105.08533 (2021).

Guided video tour

40 min video tour, preceded by a 20 min introductory talk.

Video tour: self-made smartphone videos from the beamline, archive footage of construction and transport of the spectrometer, and animations visualising the measurement principle.

Language: English or German.
Medium: video stream in zoom, paused for explanations.
Target audience: pupils, general public, evaluation reports.
Production: self-made smartphone videos of the beamline, archive footage and computer animations, cut together in blender.

Picture credit: Karmann Medienproduktion und Verlag GmbH

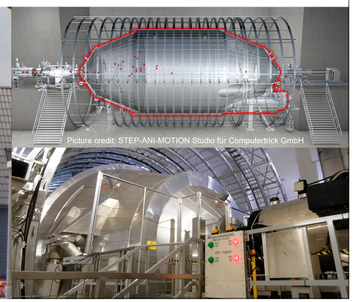
Picture credit: STEP-ANI-MOTION Studio für Computertrick GmbH

360° VR panorama (vr.nawik.de)

360° panoramas at five locations along the beamline:
either as tour with virtual guide or in free exploration, including info points, X-ray view into the setup, and encounters with scientists.

Language: German.
Medium: online in web browsers or with a VR headset.
Target audience: general public, (Master) students.
Production: made by the company kubikfoto.
Co-funded by the KIT and the NaWik.
The NaWik investigates the reception by laypersons and knowledge-transfer potential to Master students.

Picture credit: Kubikfoto GmbH

Low-poly model with 3D viewer

Interactive 3D viewer of the beamline (work in progress):
3D navigation, select, (un)hide and zoom onto components, detailed explanations in a legend or as labels in the viewport.
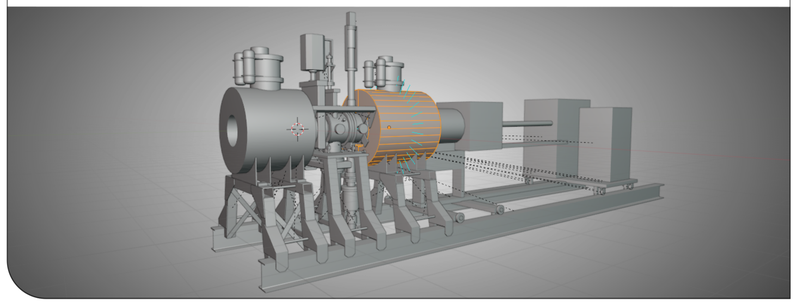
Language: English or German.
Medium: online in web browsers as WebGL app.
Target audience: interested laypersons, evaluation reports.
Production: low-poly modelling in blender. Two options for viewer: either in JavaScript with babylon.js (open source Apache license) or in C# with the Unity game engine (commercial license).